Rod Ends Series E - Steel on Steel

Series EA (-2RS)

Rod Ends with male thread made from free-cutting or heat-treated steel, zinc plated, with steel on steel Spherical Plain Bearings which require lubrication

For use at high multi-directional loads and limited fitting dimensions

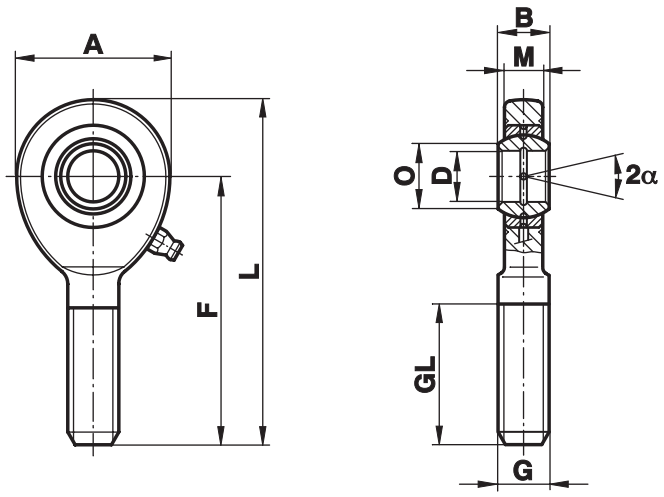

Size (D)	B	M	A	F	L	O	G	GL	Static load C_0 kN	Dynamic load C kN	Pivoting angle α	Weight g
6	6	4,4	20	36	46,0	8,0	M 6	18	6,9	3,4	13	16
8	8	6,0	24	42	54,0	10,2	M 8	22	12,7	5,5	15	28
10	9	7,0	28	48	62,0	13,2	M 10	26	19,9	8,1	12	50
12	10	8,0	34	54	71,0	14,9	M 12	28	29,0	10,8	11	86
15	12	10,0	40	63	83,0	18,4	M 14	34	39,5	17,0	8	140
16	14	11,0	46	69	92,0	20,7	M 16	36	54,0	21,2	10	190
17	14	11,0	46	69	92,0	20,7	M 16	36	54,0	21,2	10	190
20	16	13,0	53	78	104,5	24,2	M 20x1,5	43	62,5	30,0	9	320
25	20	17,0	64	94	126,0	29,3	M 24x2	53	92,0	48,0	7	560
30	22	19,0	73	110	146,5	34,2	M 30x2	65	124,0	62,0	6	890
35	25	21,0	82	140	181,0	39,8	M 36x3	82	144,0	80,0	6	1400
40	28	23,0	92	150	196,0	45,0	M 39x3	86	178,0	100,0	7	1800
45	32	27,0	102	163	214,0	50,8	M 42x3	94	263,0	127,0	7	2610
50	35	30,0	112	185	241,0	56,0	M 45x3	107	320,0	156,0	6	3450
60	44	38,0	135	210	277,5	66,8	M 52x3	115	497,0	245,0	6	5900
70	49	42,0	160	235	315,0	77,9	M 56x4	125	566,0	315,0	6	8200
80	55	47,0	180	270	360,0	89,4	M 64x4	140	752,0	400,0	6	12000

Materials:

Housing: up to size 10 turned, from free-cutting steel to 9SMnPb28K, 12L13
from size 12 forged from heat-treated steel to C45, Aisi 1045

Bearing: Steel on steel bearing GE...E, requiring lubrication (see page 56)
from size 20 available sealed from both sides (-2RS)

Greasing: up to size 17 without lubrication fitting
from size 20 fitted with hydraulic grease nipples to DIN 71412