Needle roller and cage assemblies K40X48X20 (Series K)

to DIN 5405-1/ISO 3030

The datasheet is only an overview of dimensions and basic load ratings of the selected product. Please always observe all the guidelines in these overview pages. Further information is given on many products under the menu item "Description". You can also order comprehensive information via the Catalogue ordering system (http://www.ina.de/content.ina.de/en/mediathek/library/library.jsp) or by telephone on +49 (91 32) 82 - 28 97.

F_w	40	mm	
E_w	48	mm	
B_c	20	mm	
m	49	g	Mass
C_r	36000	N	Basic dynamic load rating, radial
C_{0r}	59000	N	Basic static load rating, radial
C_{ur}	7500	N	Fatigue limit load, radial
n_G	11100	1/min	Limiting speed
n_B	6100	1/min	Reference speed

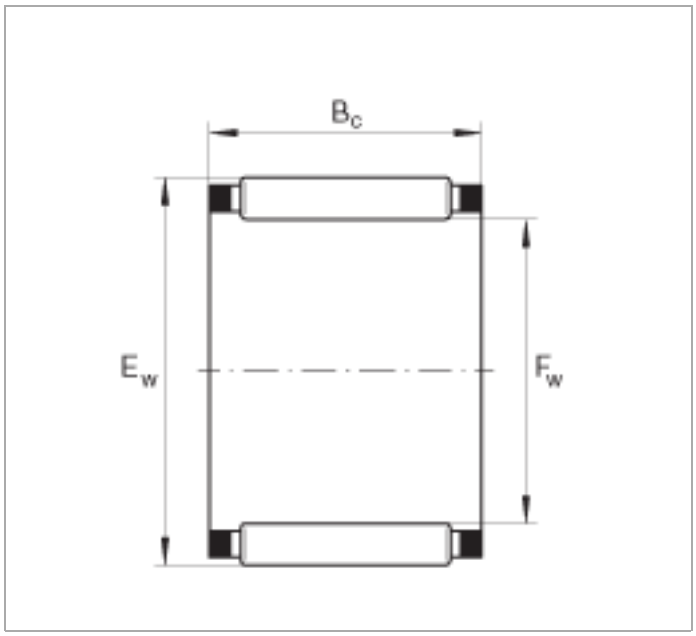
B_c
E_w
F_w