Deep groove ball bearings 6211-2Z (Series 62..-2Z)

main dimensions to DIN 625-1, gap seals on both sides

The datasheet is only an overview of dimensions and basic load ratings of the selected product. Please always observe all the guidelines in these overview pages. Further information is given on many products under the menu item "Description". You can also order comprehensive information via the Catalogue selection system (http://www.fag.de/content.fag.de/en/mediathek/library/library.jsp) or by telephone on +49 (91 32) 82 - 28 97.

d	55	mm	
D	100	mm	
B	21	mm	
d_1	68,7	mm	
D_2	88,2	mm	
$D_{a\,max}$	91	mm	
$d_{a\,min}$	64	mm	
$r_{a\,max}$	1,5	mm	
r_{min}	1,5	mm	
m	0,632	kg	Mass
C_r	46000	N	Basic dynamic load rating, radial
C_{0r}	29000	N	Basic static load rating, radial
n_G	8000	1/min	Limiting speed
n_B	7500	1/min	Reference speed
C_{ur}	1720	N	Fatigue limit load, radial

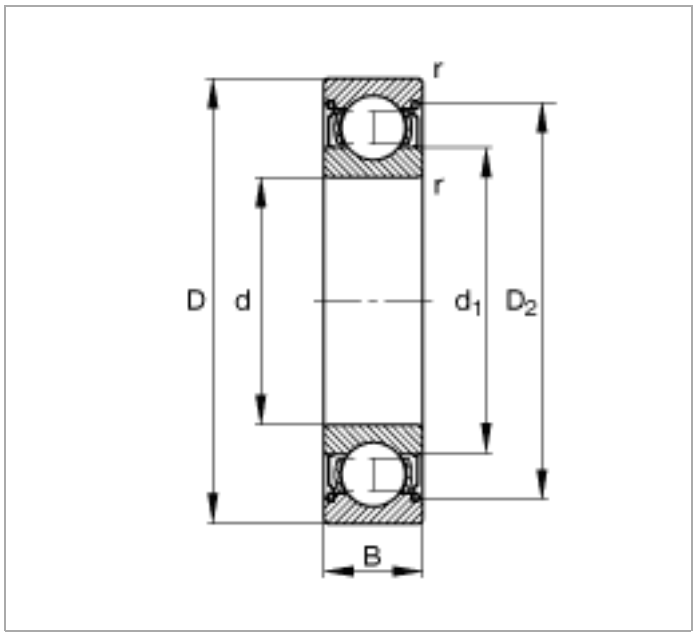
r
r
D
d
d1
D2
B

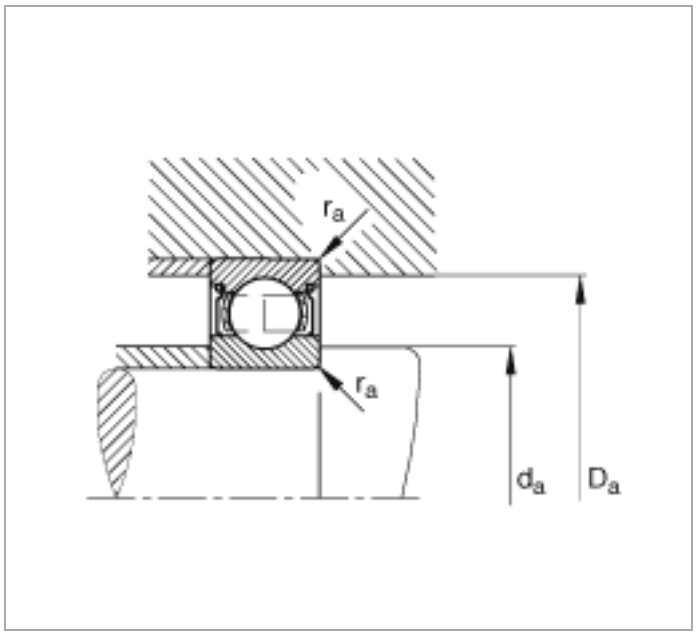
ra
ra
da
Da