Item # CB-12ET, CM-ET & CB-ET Series Stainless Steel Male Rod Ends (Ptfe Lined), Corrosion Resistant - Precision - Self-Lubricating

- Body - 17-4 PH stainless steel (AMS 5342), heat treated.
- Ball - 440 C stainless steel (AMS 5630), heat treated, hard chrome plated.
- Bushing – 17-4 PH stainless steel, heat treated, PTFE lined.
- Studded configuration available upon request. Specify by adding suffix "S". Ex.: CM-8ETS.

larger image

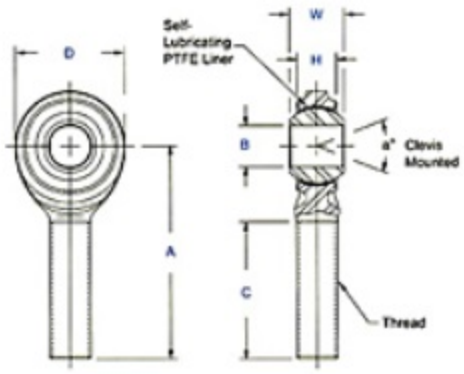

larger image

Specifications

Thread Type	Left Hand
Thread Configuration	Male
B - Ball Bore	.7500 in
W - Ball Width	.875 in
H - Head Width	.593 in
A - Base to Center	2.875 in
D - Head Diameter	1.750 in
Ball Diameter	1.250 in
C - Thread Length	1.750 in
Thread Size	3/4-16
Thread Class	UNF-3A-LH
a - Misalignment Angle Clevis Mounted	20 °
Ultimate Radial Static Load Capacity	25549 lb
Approximate Brg. Weight	.57 lb
Options	Stud