Item # XAB-12, XAM & XAB Series Male Rod Ends, High Strength Alloy - Heavy Duty Shank (Ptfe Liners Available)

- Body - Alloy steel, heat treated, protective coated for corrosion resistance.
- Race - Alloy steel, heat treated protective coated for corrosion resistance. (Carbon steel with Ptfe liners)
- Ball - Alloy steel, heat treated, hard chrome plated.
- All sizes solid shank type.
- Grease Fitting available for all sizes. Units are supplied without grease fittings. When a grease fitting is required, specify by adding suffix "Z" or "F". Ex.: XAM-6Z = Zerk Type Fitting XAM-6F = Flush Type Fitting.
- Load ratings apply only to rod ends without grease fittings. For load ratings with fittings, please consult our engineering department.
- Studded configuration available upon request. Specify by adding suffix "S". Ex.: XAM-8S.
- Ptfe Liners available upon request. Specify by adding suffix "T". Ex.: XAM-8T.

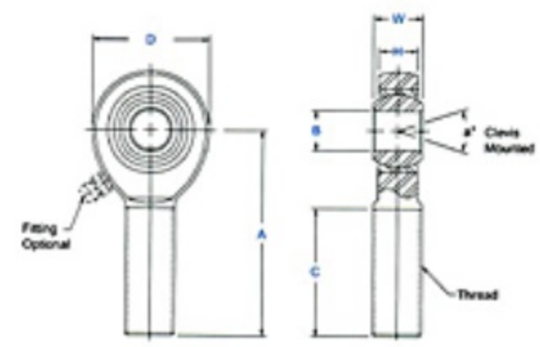

Specifications

Thread Type	Left Hand
Thread Configuration	Male
B - Ball Bore	.7500 in
W - Ball Width	.875 in
H - Head Width	.687 in
A - Base to Center	3.375 in
D - Head Diameter	2.000 in
Ball Diameter	1.312 in
C - Thread Length	1.875 in
Thread Size	7/8-14
Thread Class	UNF-3A-LH
a - Misalignment Angle Clevis Mounted	12 º
Ultimate Radial Static Load Capacity	55692 lb
Approximate Brg. Weight	.918 lb
Options	Stud
Type of Lubrication	None

XAM & XAB Note

- All sizes solid shank type.
- Grease Fitting available for all sizes. Units are supplied without grease fittings. When a grease fitting is required, specify by adding suffix "Z" or "F". Ex.: XAM-6Z = Zerk Type Fitting XAM-6F = Flush Type Fitting.
- Load ratings apply only to rod ends without grease fittings. For load ratings with fittings, please consult our engineering department.
- Studded configuration available upon request. Specify by adding suffix "S". Ex.: XAM-8S.
- Ptfe Liners available upon request. Specify by adding suffix "T". Ex.: XAM-8T.